High speed precision spindles

SCHEDA TECNICA

AF 110 CU 14/2 HSK E50

MODELLO	TENSIONE [Volt]	FREQUENZA [Hz]	GIRI	POT. RESA [Kw]	ASSORB. [Amp]	Cos j	PESO [Kg]
AF110 14/2 CU HSK E-50 aria compressa	350	200 - 300	12000 - 18000	7,0	16,0	0,85	28
HSK E-50 liquido	350	200 - 300	12000 - 18000	7,5	18,0	0,85	28
AF110 14/2 CU HSK E-50 aria compressa	350	300 - 400	18000 - 24000	7,0	16,0	0,82	28
HSK E-50 liquido	350	300 - 400	18000 - 24000	8,5	19,4	0,82	28

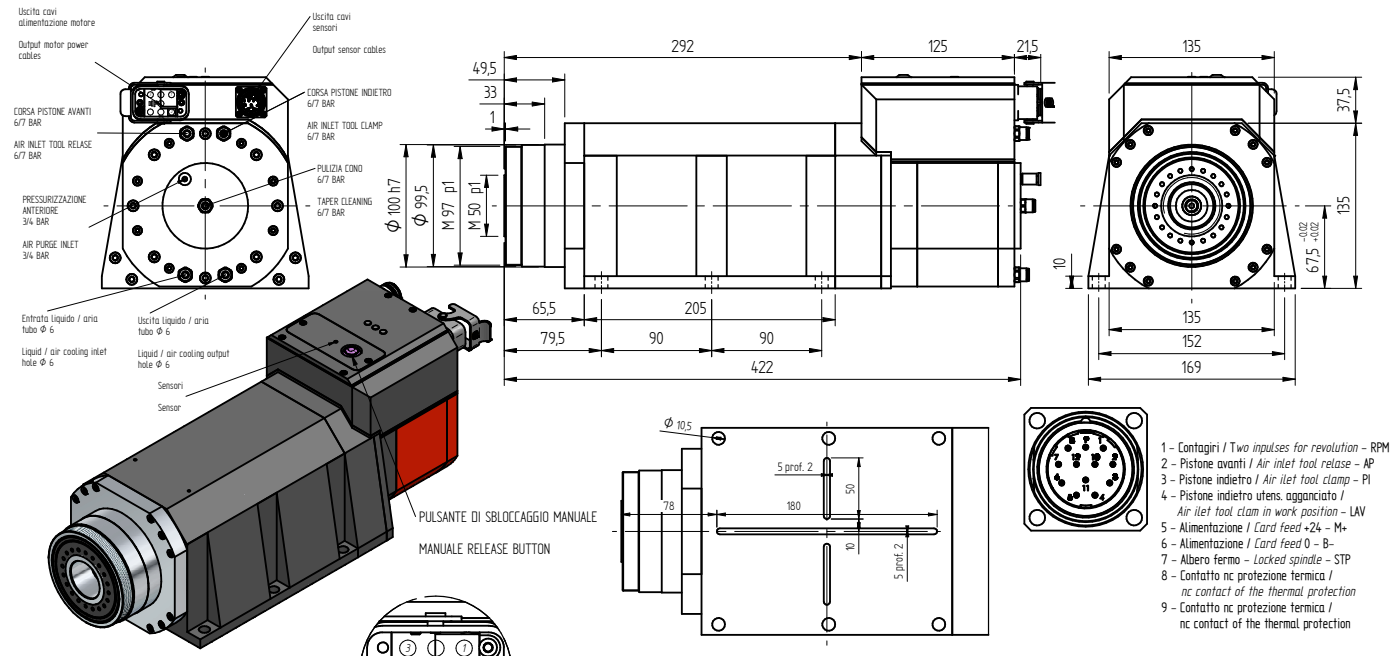

ELTE srl - Via Mario Carraro, 1 - 36075 Alte di Montecchio Maggiore - Vicenza - Italy - Phone +39 0444 746999 - FAX +39 0444 746990 - info@eltesrl.com - www.elte.eu